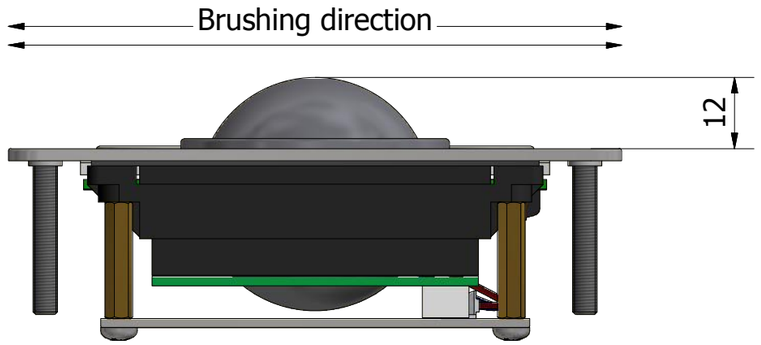

Trackball is provided with 1,6mt long cable, terminated with PS/2+USB connectors

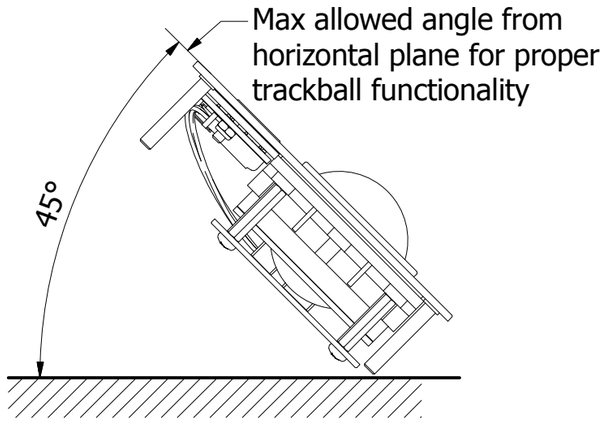

Suggested cutout

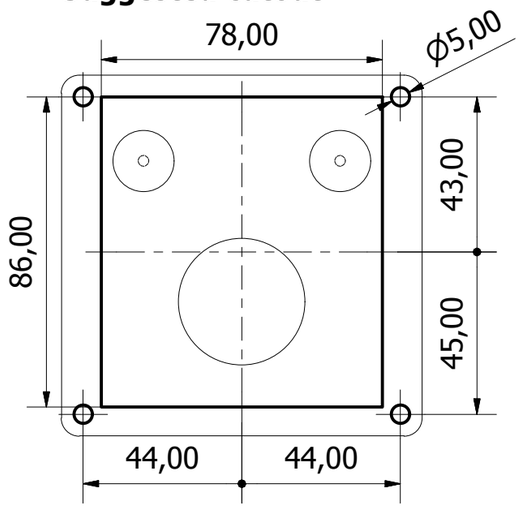

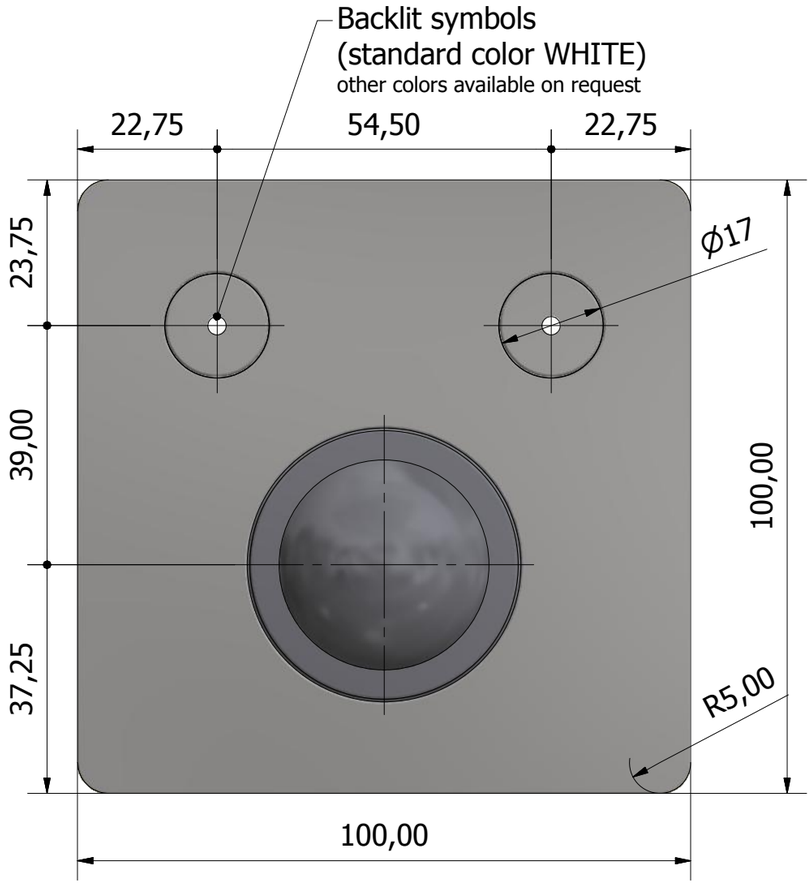

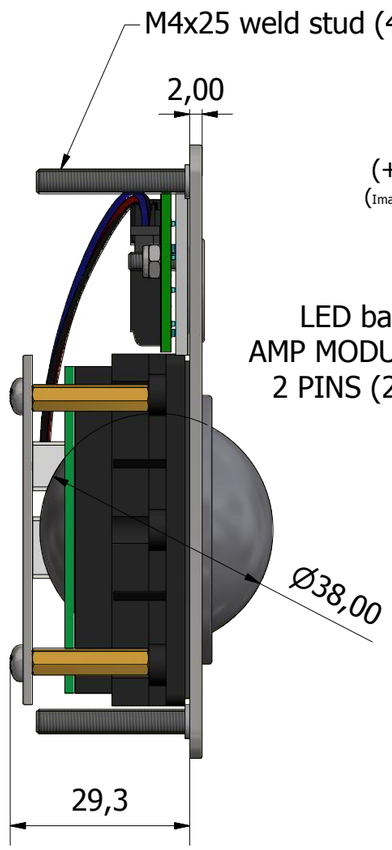

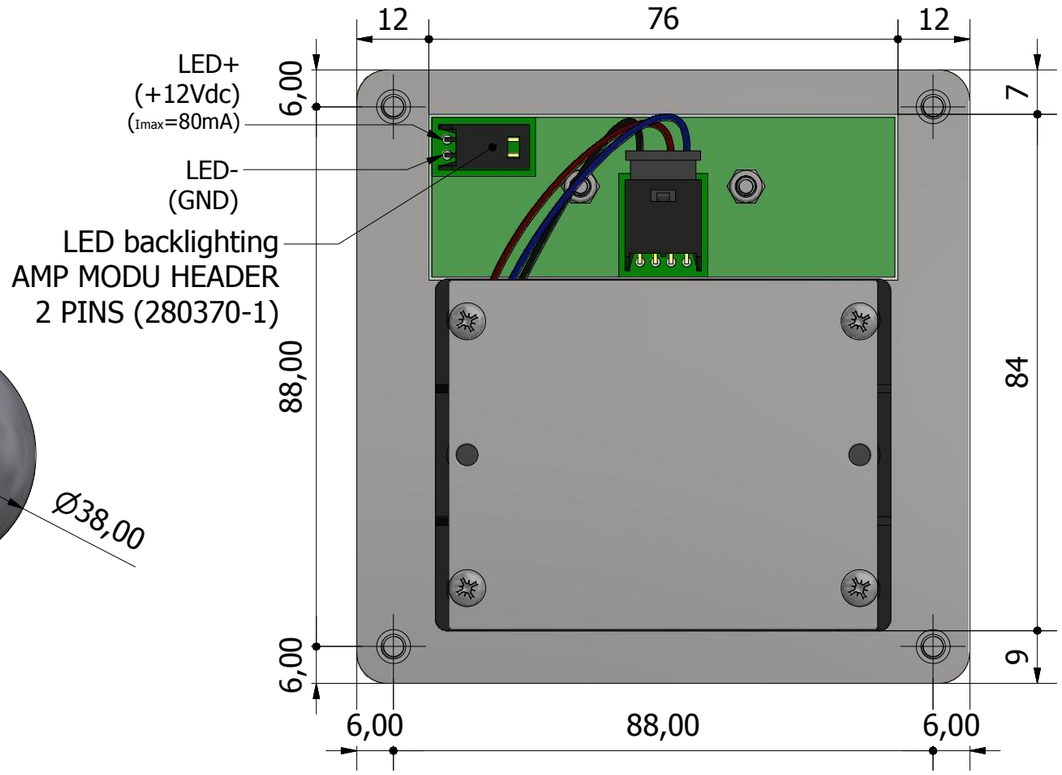

Material	AISI 316L Stainless Steel (2,00 mm thick) front plate; AISI 316L Stainless steel (1,5 mm thick) buttons with built-in silicone rubber sealing gasket
Button stroke	0,6 mm +/- 0,1 mm
Actuation force	4,0 N (typical)
Life expectancy	>3.000.000 cycles
IP Protection rate	IP65 (when ball is stationary); IP54 (when ball is rotating)
Contact technology	Stainless steel metal dome on Gold plated PCB
Connection	USB + PS/2
Operating temperature	0°/+50°C
Storage temperature	-25°/+55°C

Grafos Steel S.r.l.
Via Treves 19/21
41043 Formigine (MO) ITALY
Tel. +39.059.57.50.267
www.grafossteel.it

Title: Digi Inox keyboard;2 buttons (R17 keycap) white illuminated; front mount; USB+PS/2 connection; Stainless steel trackball

P/N: DGI.02R17.F-B-TI

Rev:

File: DGI.02R17.F-B-TI (data sheet).idw

Dimensions without indicated tolerances - precision according to: ISO 2768 **F**

Tolerance class	Lenght (mm) >0 - 6	>6-30	>30-120	>120-400
C (Coarse)	± 0.2	± 0.5	± 0.8	± 1.2
M (medium)	± 0.1	± 0.2	± 0.3	± 0.5
F (Fine)	± 0.05	± 0.1	± 0.15	± 0.2

Drawn: A.Tosi

Approved:

Date: 13/11/2016

Material:

Surface treatment:

Sheet: 1 Of: 1

UNLESS OTHERWISE SPECIFIED, DIMENSIONS ARE IN MILLIMETERS